commodore

10.7.1980 PJ

F L O P P Y 3040

Umrüstung auf DOS 2,0

Zum Betrieb der Floppy 3040 mit dem Computer 8032 ist der Umrüstsatz DOS 2,0 erforderlich.

Es besteht aus 4 ROM's auf der Digitalplatine:

901468-11, 12, 13
901466-04

Platz	neuer ROM-Satz DOS 2,0	alter ROM-Satz DOS 1,0
UK 3	901466-04 o. 6530-034	901466-02
UL 1	901468-12	901468-06
UJ 1	901468-11	frei
UH 1	901468-13	901468-07

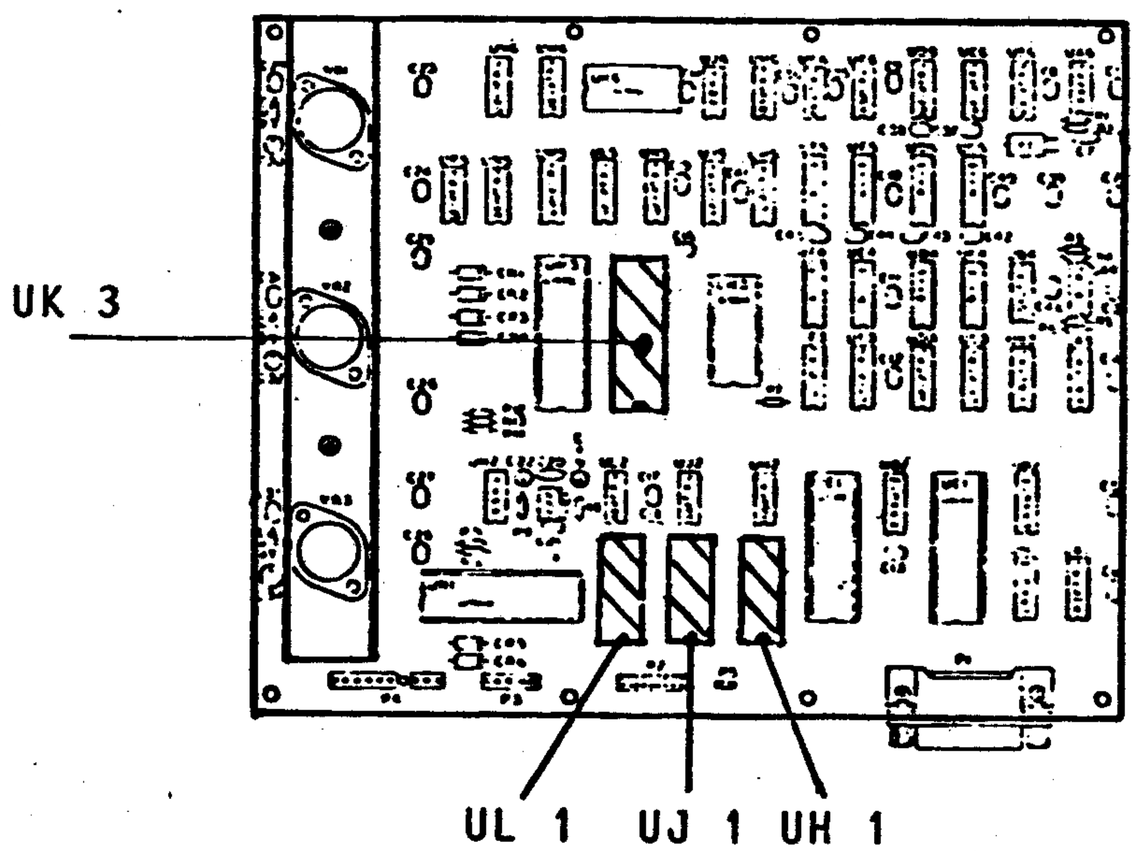

Digitalplatine
3040

commodore

19. Juni 1980

3040 FLOPPY - FEHLER

Ober die zwei unteren Befestigungsschrauben des Digitalboards wird durch das Metallgehäuse eine Masseverbindung hergestellt. (Data Ground/Chassis Ground lt. Stecker). Wenn diese Schrauben lose sind oder keinen guten Kontakt geben, besteht die Möglichkeit, das PIN 8 der 74 LS 157 (UD/UE/UF 3) nicht an Masse liegt.

Resultat: Motoren laufen unkontrolliert, oder Read-Error LED brennt.

Abhilfe: Schrauben anziehen, auf einwandfreie Masseverbindung achten.

Beim Geräte-Service ist folgendes zu beachten:
Nach Ausbau des Digitalboards ist mittels externer Leitung (Clip oder anlöten) diese Verbindung herzustellen und mit dem zentralen Massepunkt zu verbinden, ansonsten sofort die 3 Chip 74 LS 157 (UD3/UE3/UF 3) zerstört werden.

Mit eingestecktem NOP-Tester (6502) und Oszilloskop die I/O Leitungen der besagten IC überprüfen.

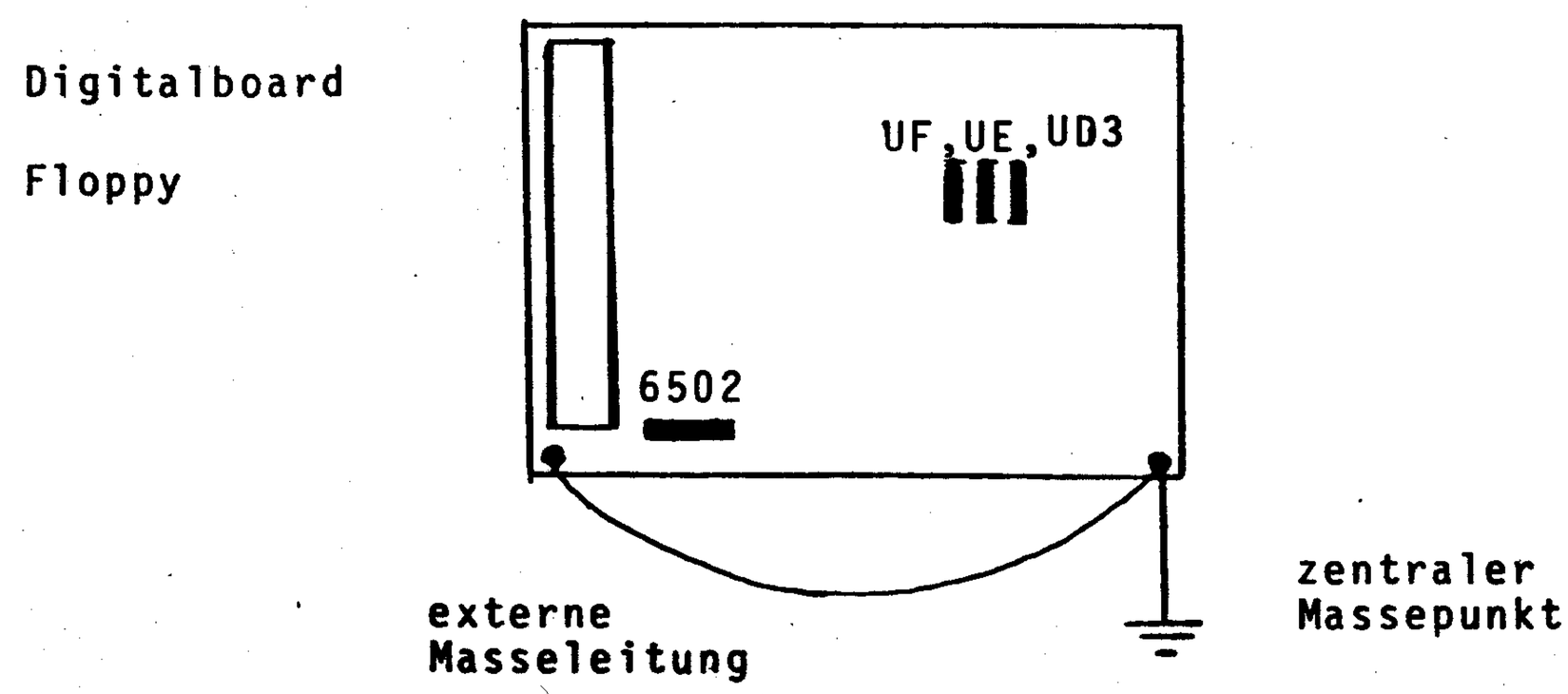

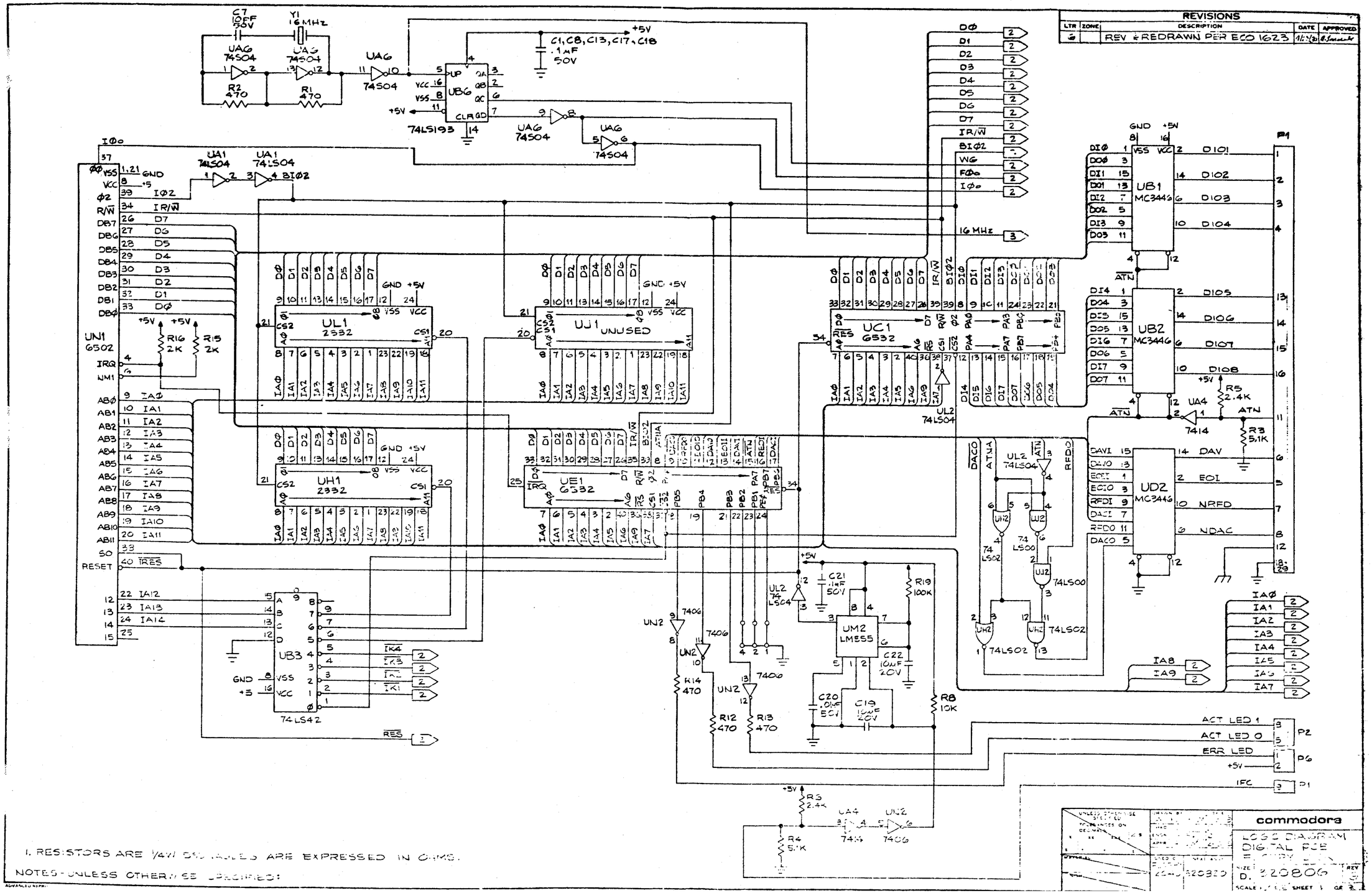

1. RESISTORS ARE 1/4W 5% UNLESS ARE EXPRESSED IN OHMS.

NOTES-UNLESS OTHERWISE SPECIFIED:

REVISIONS				
LTR	ZONE	DESCRIPTION	DATE	APPROVED
		SEE SHT #1		

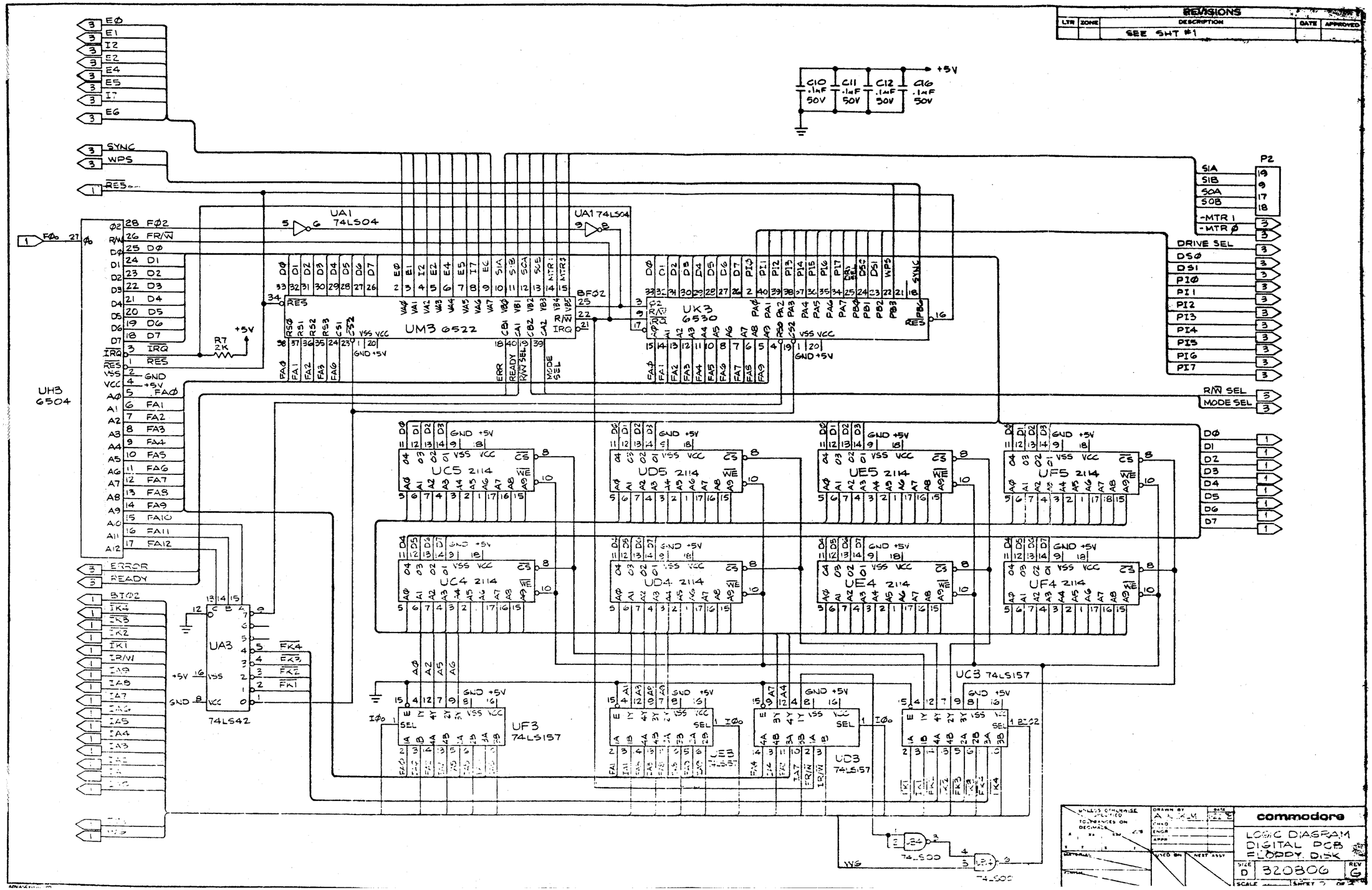

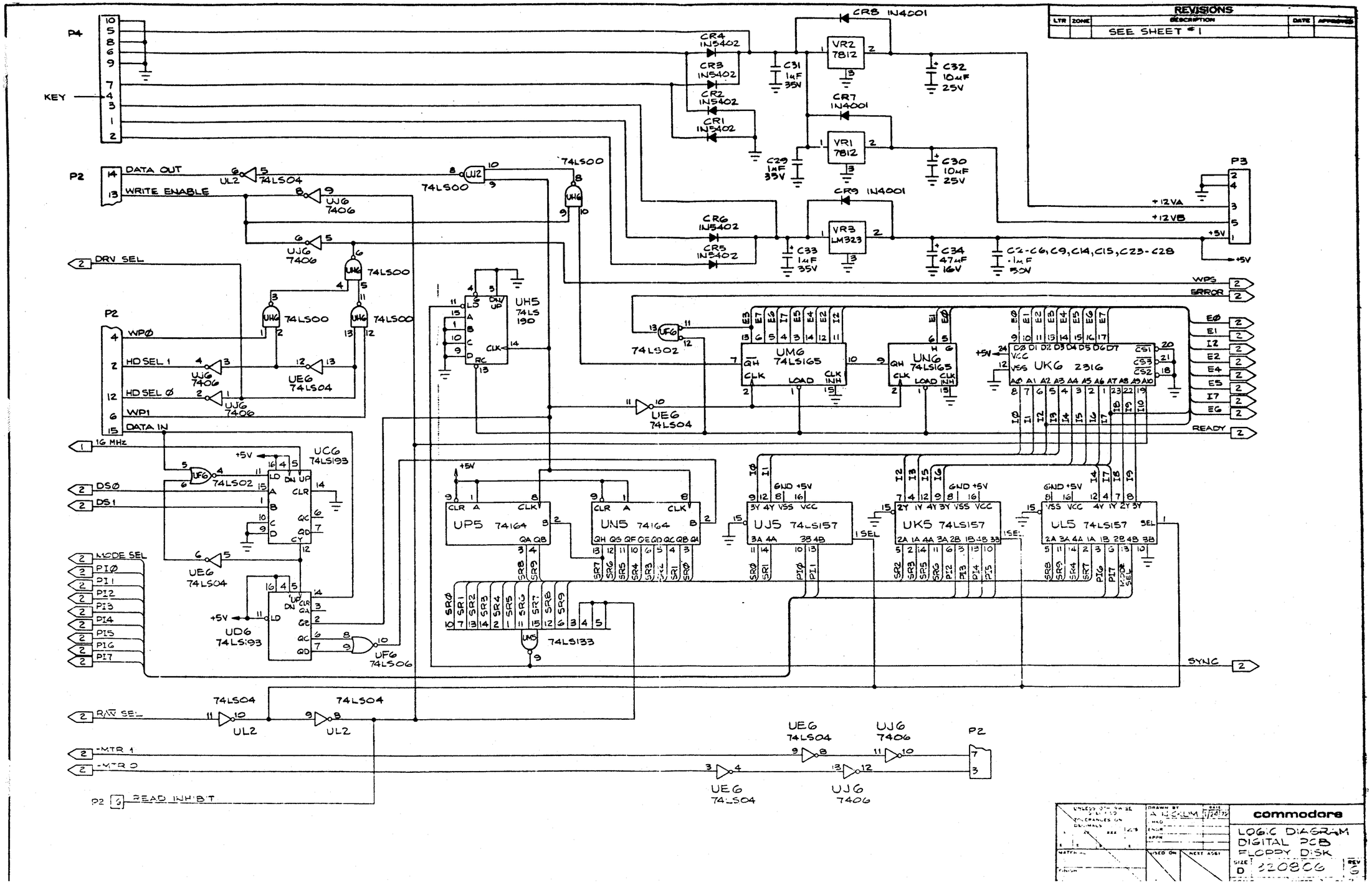

commodore

LOGIC DIAGRAM
DIGITAL PCB
FLOPPY DISK

SIZE D 220806 REV 3

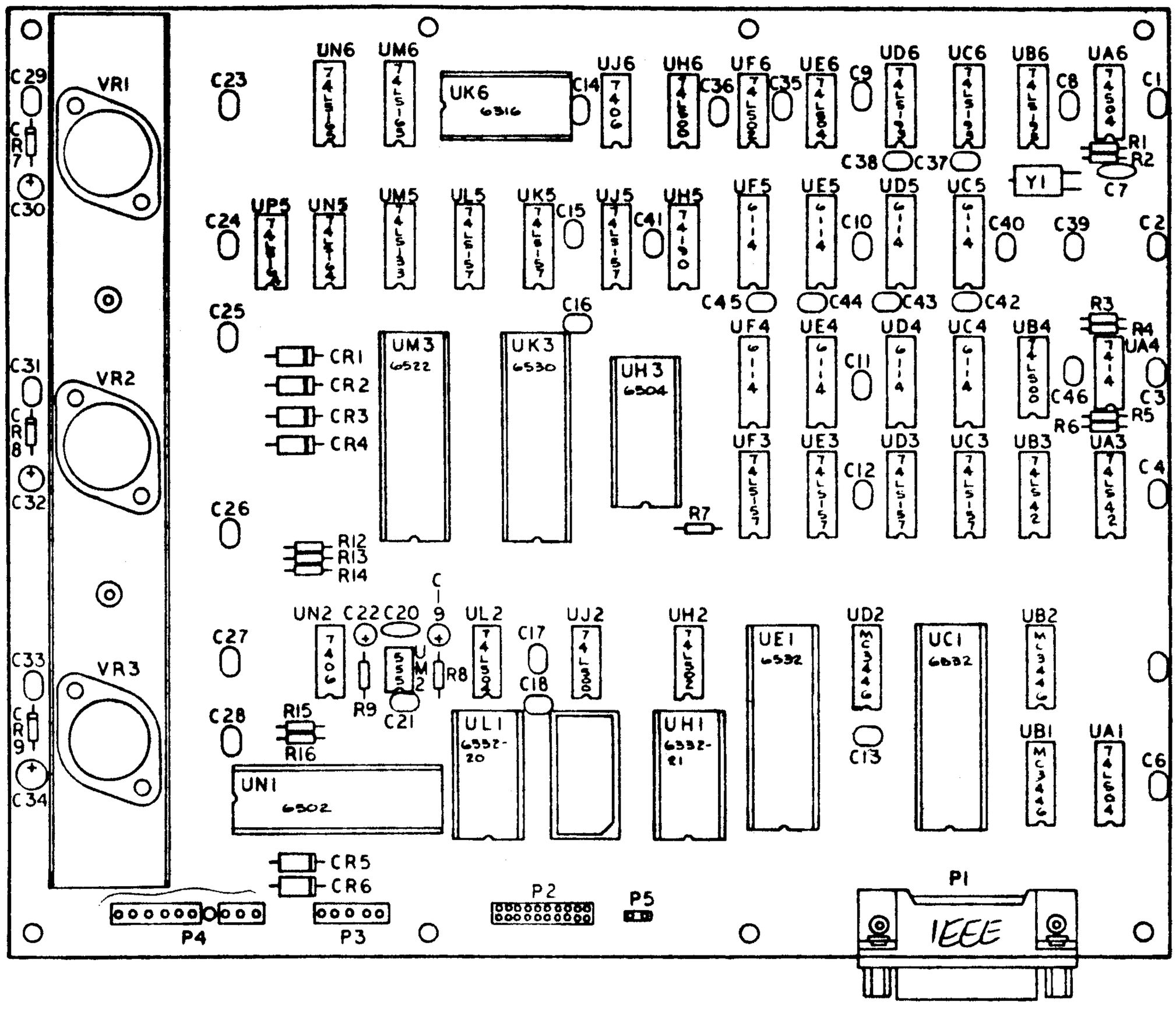
VR1
VR2
VR3
C29
CR7
C30
C31
CR8
C32
C33
CR9
C34
C23
C24
C25
C26
C27
C28
UN6
UM6
UK6
6316
UJ6
UH6
UF6
UE6
UD6
UC6
UB6
UA6
C14
C36
C35
C9
C8
C1
R1
R2
C7
C38
C37
Y1
UP5
UN5
UM5
UL5
UK5
UJ5
UH5
UF5
UE5
UD5
UC5
C15
C41
C10
C40
C39
C2
C45
C44
C43
C42
C16
UM3
6522
UK3
6530
UH3
6504
UF4
UE4
UD4
UC4
UB4
UA4
R3
R4
C11
C46
C3
R5
R6
CR1
CR2
CR3
CR4
UF3
UE3
UD3
UC3
UB3
UA3
C12
C4
R7
R12
R13
R14
UN2
C22
C20
C19
UL2
UJ2
UH2
UE1
6532
UD2
UC1
6532
UB2
C17
C18
UM2
R8
R9
C21
R15
R16
UL1
6532-20
UH1
6532-21
C13
UB1
UA1
C6
UN1
6502
CR5
CR6
P2
P5
P1
IEEE
P4
P3

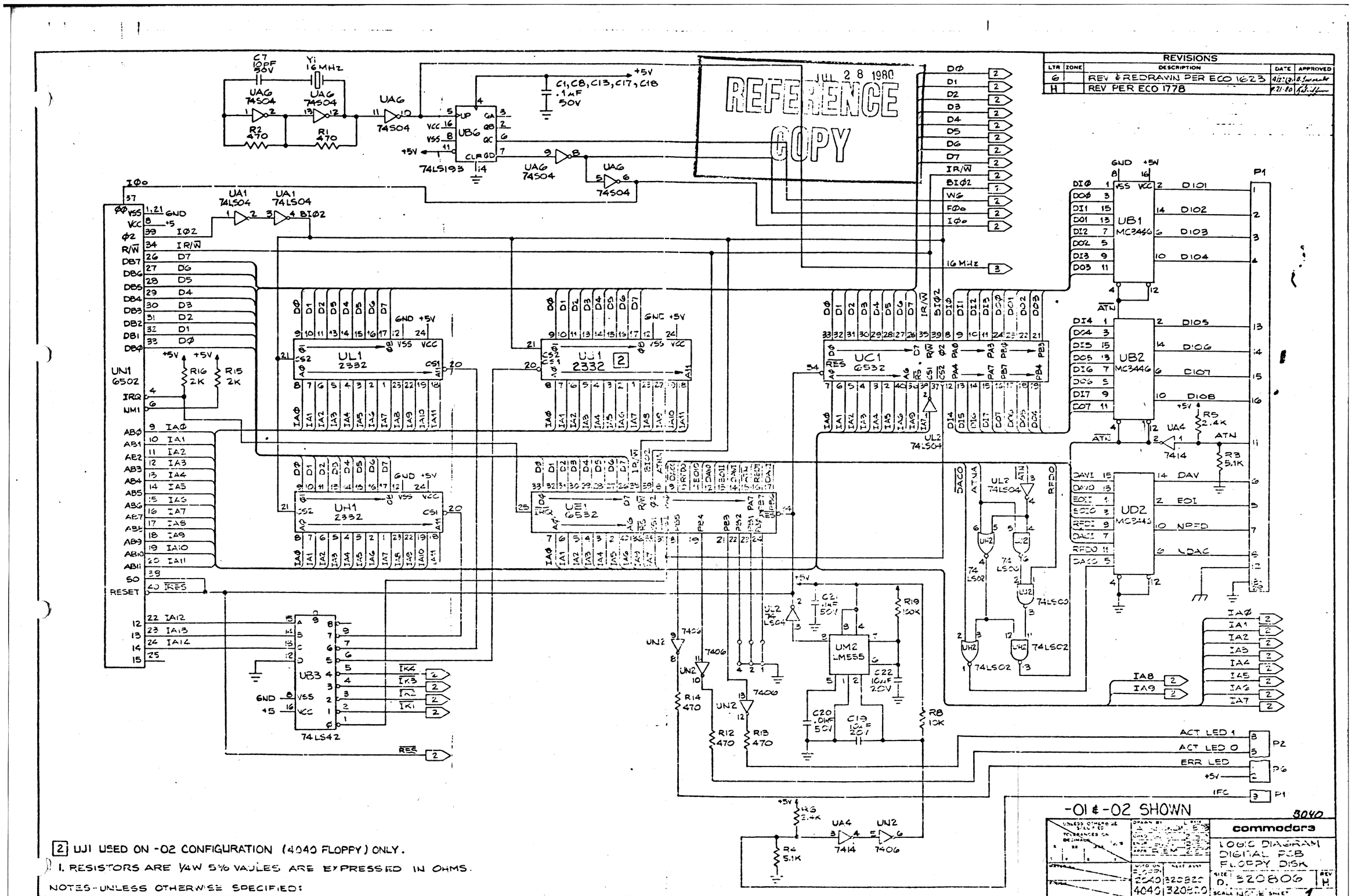

2 UJ1 USED ON -02 CONFIGURATION (4040 FLOPPY) ONLY.

1. RESISTORS ARE 1/4W 5% VALUES ARE EXPRESSED IN OHMS.

NOTES-UNLESS OTHERWISE SPECIFIED:

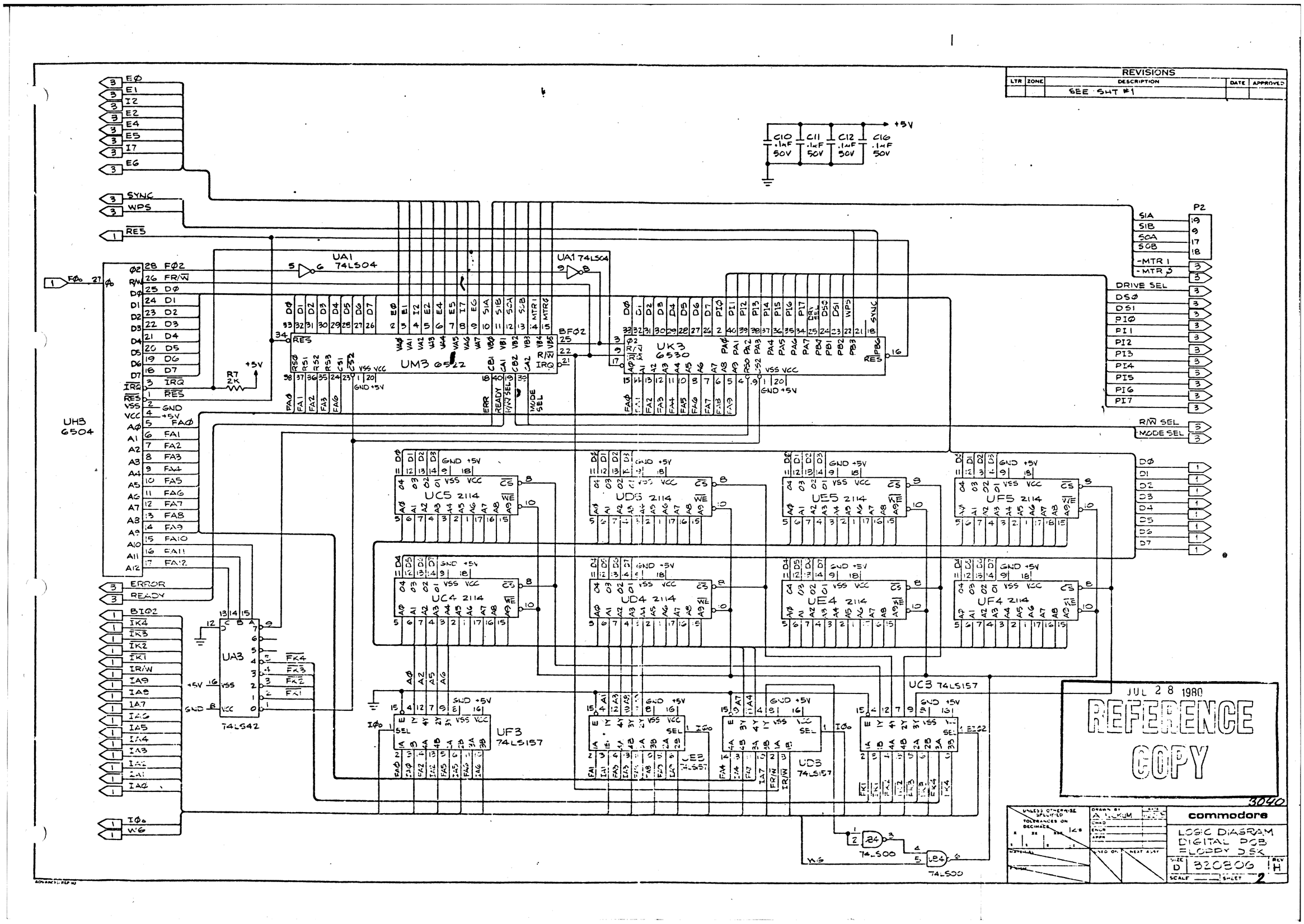
REVISIONS
LTR ZONE DESCRIPTION DATE APPROVED
SEE SHT #1
UH3 6504
UA1 74LS04
UM3 6512
UK3 6530
UA3 74LS42
UF3 74LS157
UE3 74LS157
UD3 74LS157
UC3 74LS157
UC5 2114
UD5 2114
UE5 2114
UF5 2114
UC4 2114
UD4 2114
UE4 2114
UF4 2114
74LS00
P2
C10 .1uF 50V
C11 .1uF 50V
C12 .1uF 50V
C16 .1uF 50V
+5V
R7 2K
JUL 28 1980
REFERENCE COPY
commodore
LOGIC DIAGRAM
DIGITAL PCB
FLOPPY DISK
D 320806 H
SCALE SHEET 2

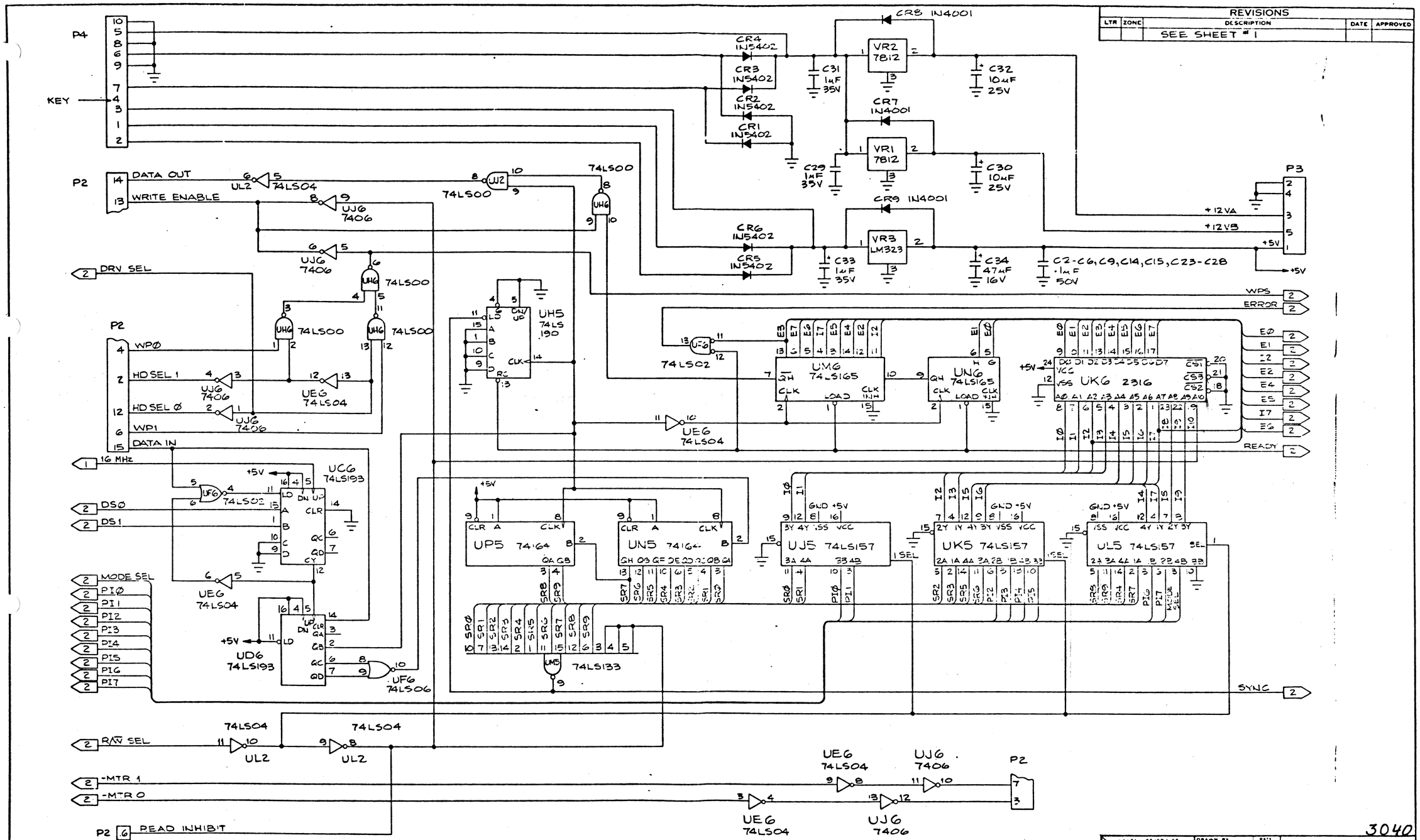

REVISIONS				
LTR	ZONE	DESCRIPTION	DATE	APPROVED
		SEE SHEET # 1		

3040

commodore

LOGIC DIAGRAM
DIGITAL PCB
FLOPPY DISK

SIZE D 320806 REV H

SCALE — SHEET 3

DRAWN BY A. NICKLIN

ADVANCED HEPRO

REVISIONS				
LTR	ZONE	DESCRIPTION	DATE	APPROVED
F		REDRAWN PER ECO 2098	6/5/81	N.P.

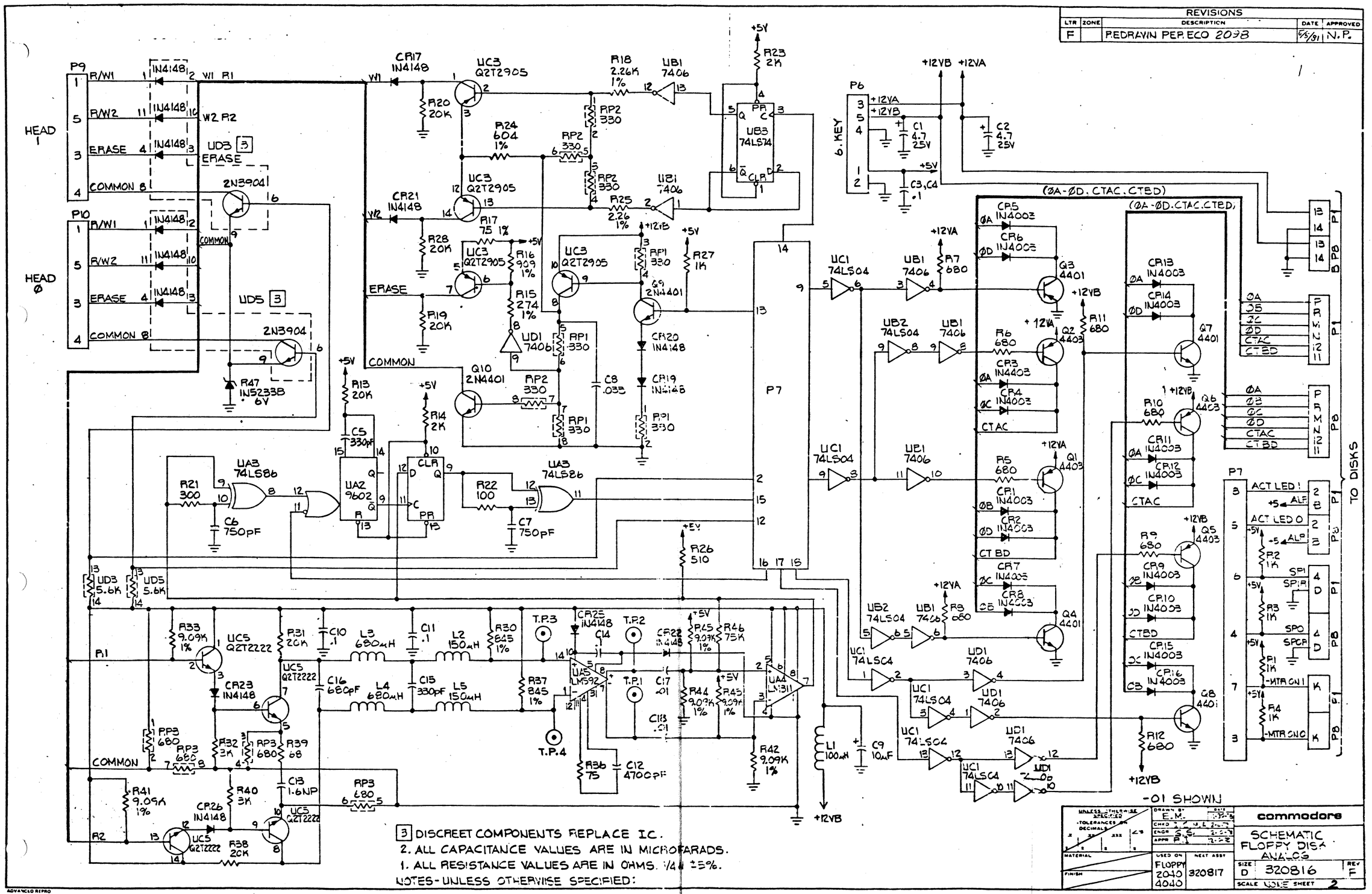

REVISIONS				
LTR	ZONE	DESCRIPTION	DATE	APPROVED
F		REDRAWN PER ECO 2098	5/5/81	N.P.

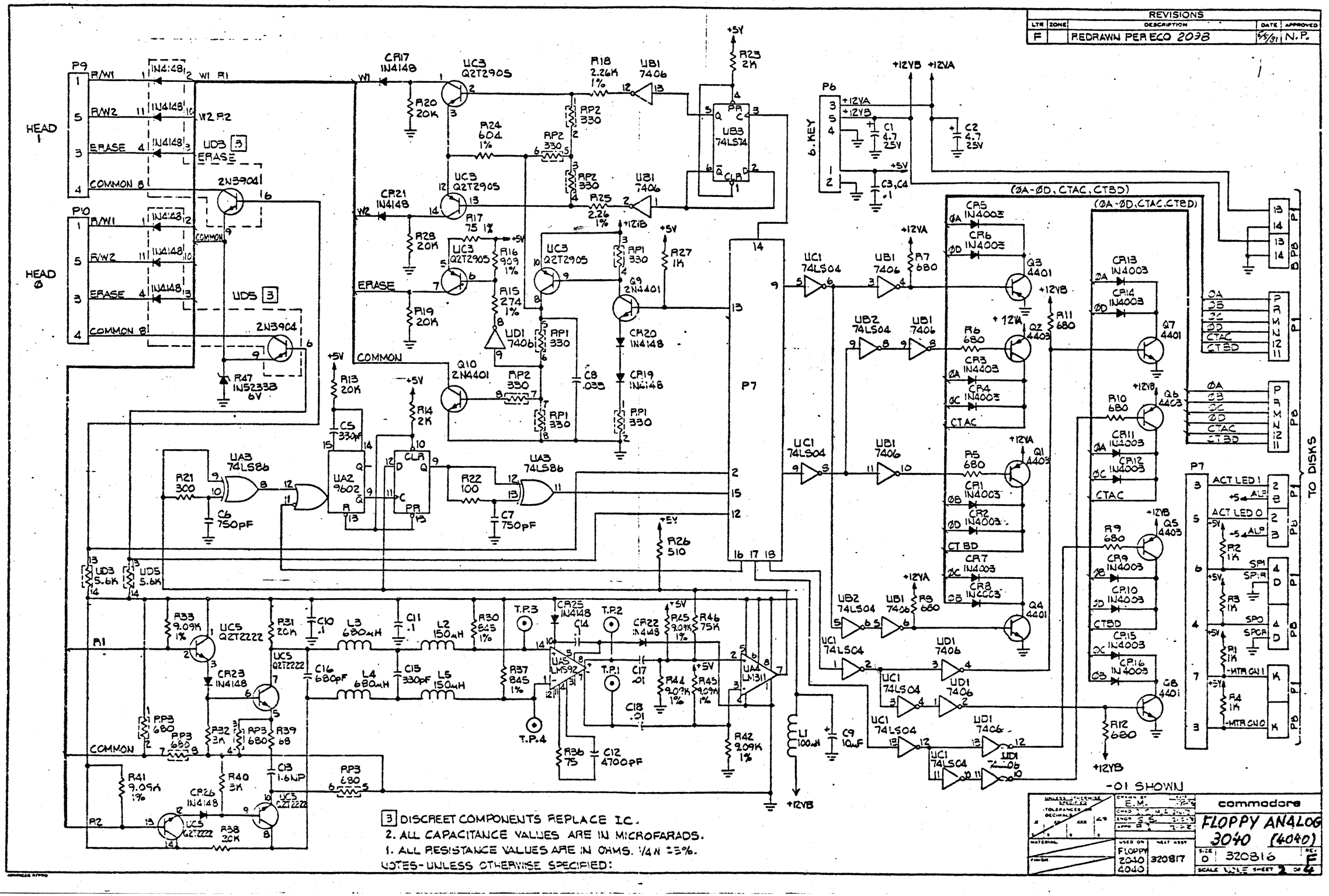

3 DISCREET COMPONENTS REPLACE IC.
2. ALL CAPACITANCE VALUES ARE IN MICROFARADS.
1. ALL RESISTANCE VALUES ARE IN OHMS. 1/4W ±5%.
NOTES-UNLESS OTHERWISE SPECIFIED:

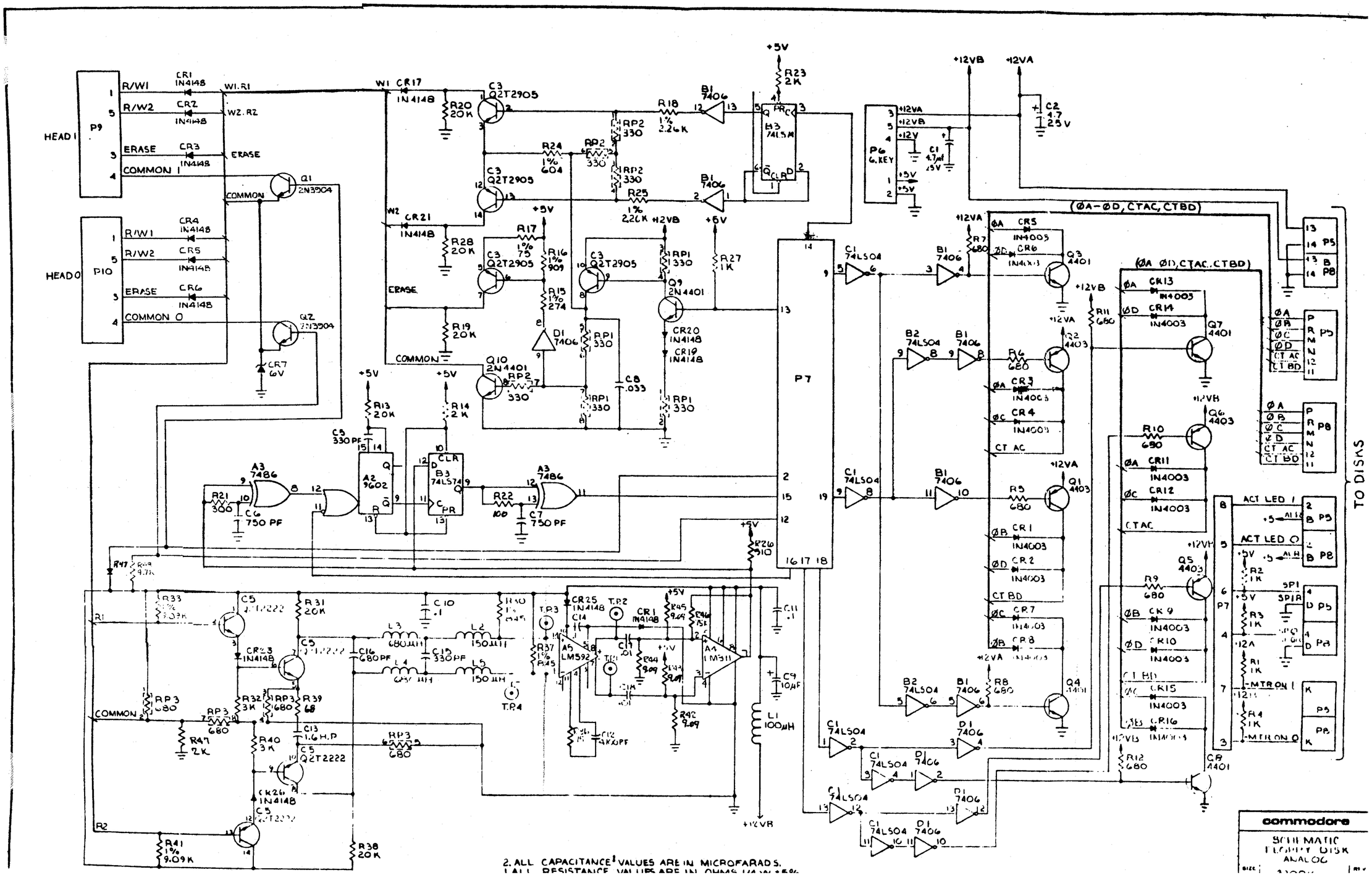
HEAD 1
HEAD 0
P9
P10
R/W1
R/W2
ERASE
COMMON
CR1 1N4148
CR2 1N4148
CR3 1N4148
CR4 1N4148
CR5 1N4148
CR6 1N4148
Q1 2N3904
Q2 2N3904
CR7 6V
W1.R1
W2.R2
CR17 1N4148
CR21 1N4148
C3 Q2T2905
R20 20K
R28 20K
R19 20K
R24 1% 604
RP2 330
R25 1% 2.26K
R18 1% 2.26K
B1 7406
B3 74LS74
R23 2K
+5V
+12VB
+12VA
C2 4.7 25V
P6 6.KEY
C1 4.7µf 25V
R17 1% 75
R16 1% 909
R15 1% 274
D1 7406
RP1 330
Q9 2N4401
CR20 1N4148
CR19 1N4148
R27 1K
+2VB
Q10 2N4401
C8 .033
R13 20K
R14 2K
C5 330PF
A2 9602
A3 74B6
R21 300
C6 750 PF
R22 100
C7 750 PF
R26 510
P7
C1 74LS04
B2 74LS04
D1 7406
R7 680
Q3 4401
Q2 4403
R11 680
R6 680
Q7 4401
Q6 4403
R10 680
R5 680
Q1 4403
Q5 4403
R9 680
R8 680
Q4 4401
R12 680
Q8 4401
CR5 1N4003
CR6 1N4003
CR13 1N4003
CR14 1N4003
CR3 1N4003
CR4 1N4003
CR11 1N4003
CR12 1N4003
CR1 1N4003
CR2 1N4003
CR7 1N4003
CR8 1N4003
CR15 1N4003
CR16 1N4003
(ØA-ØD, CTAC, CTBD)
(ØA ØD, CTAC, CTBD)
ØA
ØB
ØC
ØD
CT AC
CT BD
P5
P8
ACT LED 1
ACT LED 0
MTR ON 1
MTR ON 0
TO DISKS
R33 1% 9.09K
C5 2T2222
R31 20K
C10 .1
R30 1% 845
L3 680µH
L2 150µH
L4 680µH
L5 150µH
C16 680PF
C15 330PF
CR23 1N4148
CR25 1N4148
CR1 1N4148
T.P2
T.P3
T.P4
A5 LM592
A4 LM311
R37 1% 845
C14 .01
C17 .01
C11 .1
C9 10µF
L1 100µH
R45 9.09
R46 75K
R44 9.09
R42 9.09
C12 470PF
R32 3K
RP3 680
R39 68
C13 1.6H.P
R40 3K
R47 2K
CR26 1N4148
R41 1% 9.09K
R38 20K
R2 1K
R3 1K
R1 1K
R4 1K
SP1
SP1R
COMMON
R1
R2
2. ALL CAPACITANCE VALUES ARE IN MICROFARADS.
commodore
SCHEMATIC
FLOPPY DISK
ANALOG

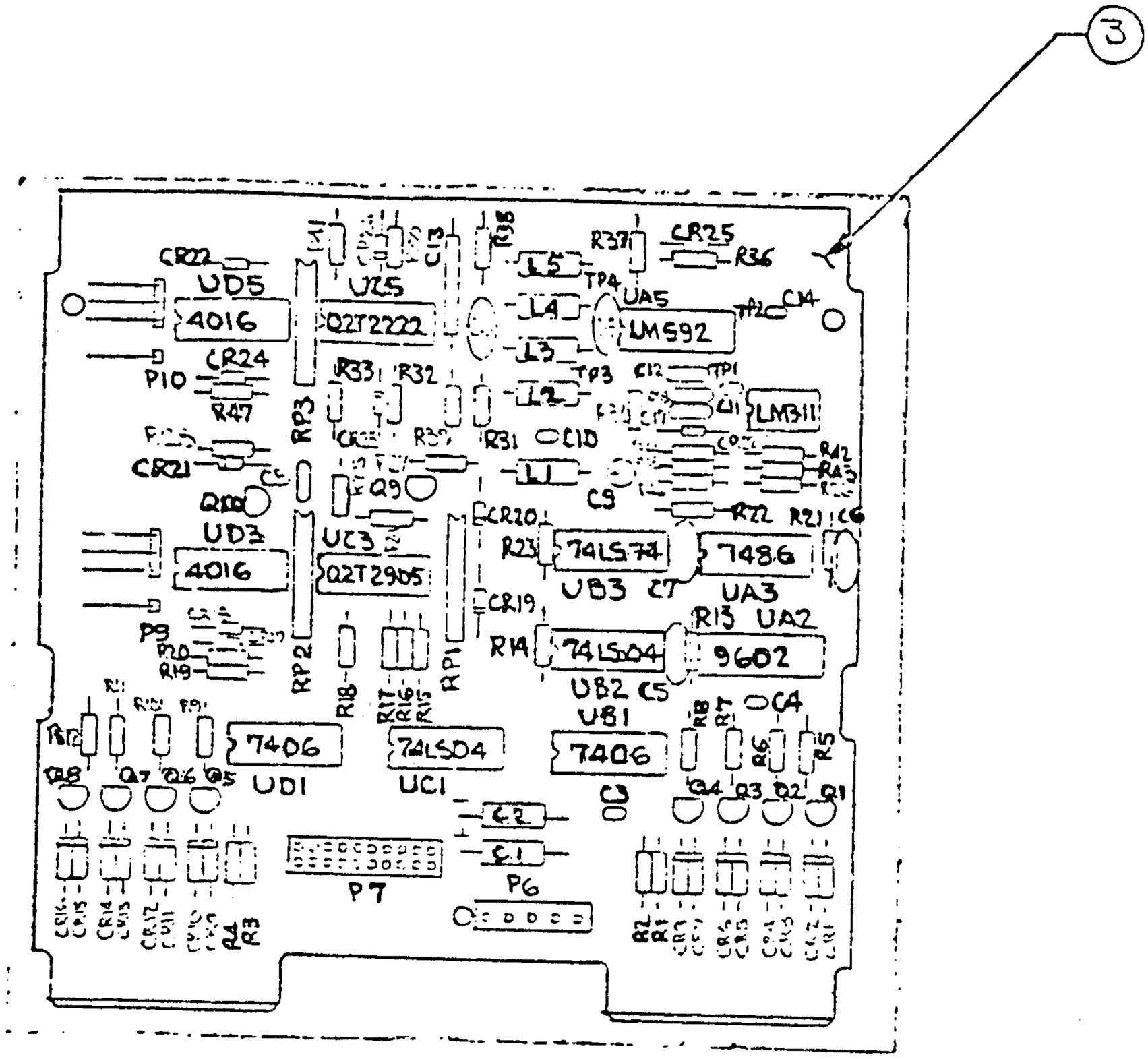

commodore

FLOPPY ANALOG
P.C. BD ASSY.

SIZE		REV
C	320817	D

SCALE FULL SHEET 4 OF 4

REVISIONS				
LTR	ZONE	DESCRIPTION	DATE	APPROVED
		SEE SH 1		

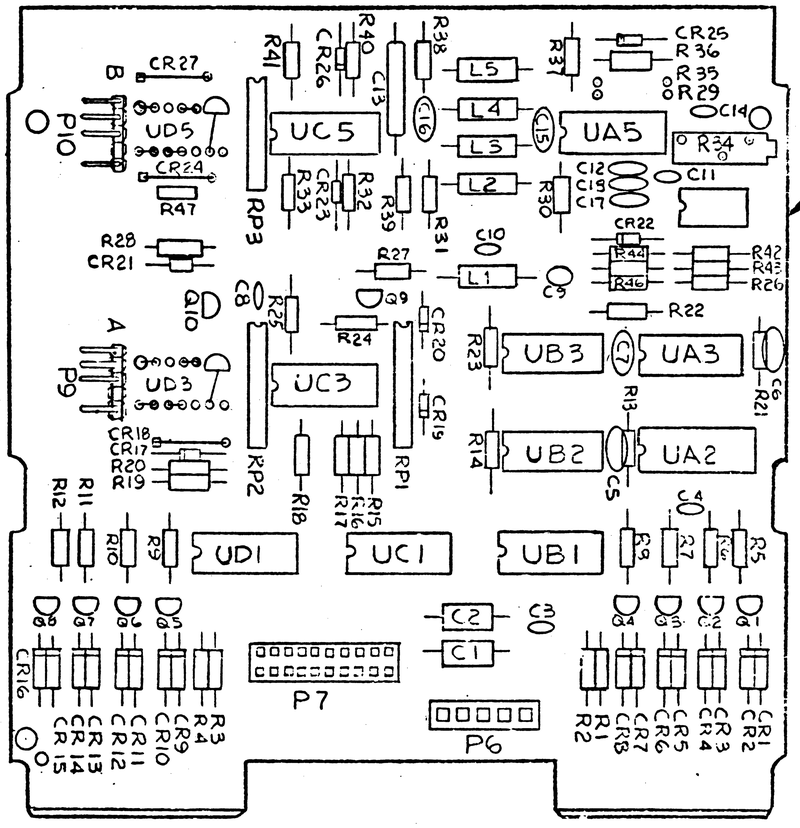

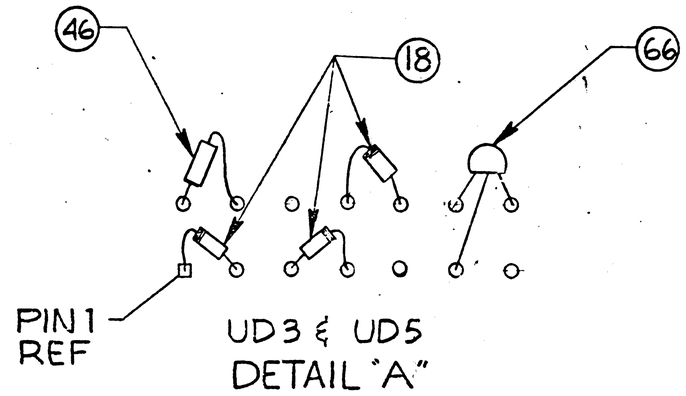

UNLESS OTHERWISE SPECIFIED TOLERANCES ON: DECIMALS .X ± .XX ± .XXX ± ∠'S ±	DRAWN BY: LLESSARD	DATE 3-27-81	commodore
	CHKD:		FLOPPY ANALOG PCB ASSY
	ENGR:		
	APPR:		
MATERIAL:	USED ON FLOPPY ANALOG	NEXT ASSY 320803	SIZE B · 320817 · REV R
FINISH:			SCALE · SHEET 1

REVISIONS				
LTR	ZONE	DESCRIPTION	DATE	APPROVED
		SEE SH 1		

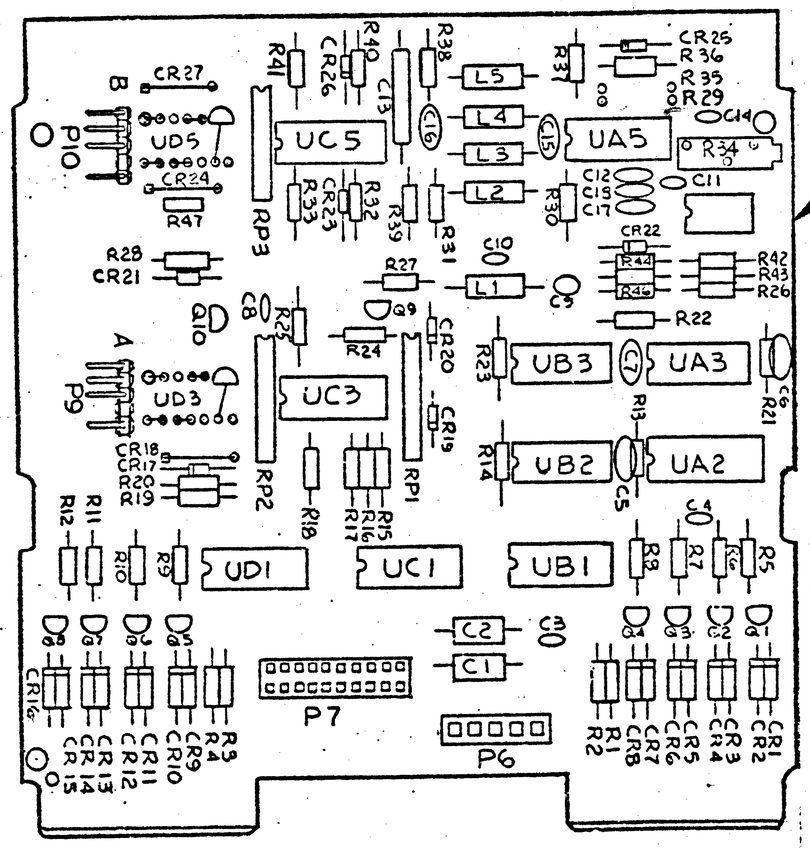

3

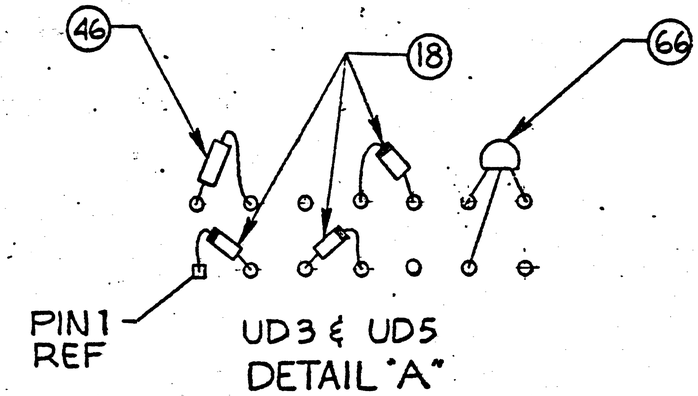

UNLESS OTHERWISE SPECIFIED TOLERANCES ON: DECIMALS .X ± .XX ± .XXX ± ∠'S ±	DRAWN BY: L. LESSARD	DATE 3-27-81	commodore
	CHKD:		FLOPPY ANALOG 3040 (4040)
	ENGR:		
	APPR:		
MATERIAL:	USED ON FLOPPY ANALOG	NEXT ASSY 320803	SIZE B — 320817 — REV R
FINISH:			SCALE — SHEET 1 von 4

QUANTITY REQD PER PART/DASH NO. 01	ITEM	DS	PART NUMBER	DESCRIPTION	REF DES	BEND	NOTES
Ref	1	D	320816-01	SCHEMATIC (REF)			
	2						
1	3	D	320815-01	PCB, FLOPPY ANALOG			
	4						
2	5	B	901521 -02	I.C., 74LS04	UC1,UB2		
2	6	↑	901522 -06	, 7406	UB1,UD1		
1	7		901521 -06	, 74LS74 DUAL D FLIP-FLOP	UB3		
1	8		901521 -32	, 74LS86 QUAD X-OR	UA3		
1	9		901510 -01	, 9602 DUAL CONE-SHOT	UA2		
1	10	↓	901523 -04	, LM311	UA4		
1	11	B	901523 -08	I.C., LM592	UA5		
	12						
	13						
1	14	B	902550 -01	TRANSISTOR QUAD NPN Q2T2222	UC5		
1	15	B	902550 -01	TRANSISTOR QUAD PNP Q2T2905	UC3		
	16						
16	17	B	900750 -05	DIODE, IN4005	CR1-16		
14	18	B	900850 -01	DIODE, IN4148 SM. SIG.	CR17,19,20-23,25,26 (3 EA @ UD3 & UD5)		
1	19	B	900948 -13	DIODE, IN5233B ZENER 6.0V ±5%	R47		
	20						
1	21	B	901301 -01	CHOKE, RF SHIELDED, 100μH	L1		
2	22	B	901301 -02	CHOKE, RF SHIELDED, 150μH	L2, L5		
2	23	B	901301 -03	CHOKE, RF SHIELDED, 680μH	L3, L4		
	24						
2	25	B	902422 -01	RESISTOR, SIP 330 Ω	RP1,2		
1	26	B	902422 -02	RESISTOR, SIP 680 Ω	RP3		
	27						
1	28	B	901751 -09	RESISTOR, 1/4 W, ±1%, 75 Ω	R17		
1	29	↑	-10	274 Ω	R15		
1	30		-11	604 Ω	R24		
2	31		-12	845 Ω	R30,37		
1	32		-13	909 Ω	R16		
2	33	↓	-14	2.26 K	R18,25		
6	34	B	901751 -15	RESISTOR, 1/4 W, ±1%, 9.09 K	R33,41-45		
	35						
	36						

commodore	TITLE: PCB ASSY, FLOPPY ANALOG	DRWN BY: L. CESSARO	DATE: 3-31-81	ENGR: A.I WATA	DATE: 4-2-81	SIZE B	320817	REV R	3
		CHKD:		APPR:					

QUANTITY REQD PER PART / DASH NO. 01	ITEM	DS	PART NUMBER	DESCRIPTION	REF DES	BEND	NOTES
REF	1	D	320816 - 01	SCHEMATIC (REF)			
	2						
1	3	D	320815 - 01	PCB, FLOPPY ANA LOG			
	4						
2	5	B	901521 -02	I.C., 74LS04	UC1,UB2		
2	6	↑	901522 -06	↑ , 7406	UB1,UD1		
1	7		901521 -06	, 74LS74 DUAL D FLIP-FLOP	UB3		
1	8		901521 -32	, 74LS86 QUAD X-OR	UA3		
1	9		901510 -01	, 9602 DUAL CONE-SHOT	UA2		
1	10	↓	901523 -04	↓ , LM 311	UA4		
1	11	B	901523 -08	I.C. , LM 592	UA5		
	12						
	13						
1	14	B	902550 -01	TRANSISTOR QUAD NPN Q2T2222	UC5		
1	15	B	902551 -01	TRANSISTOR QUAD PNP Q2T2905	UC3		
	16						
16	17	B	900750 -05	DIODE, IN4005	CR1-16		
14	18	B	900850 -01	DIODE, IN4148 SM. SIG.	CR17,19,20-23,25,26 (3 EA @ UD3 & UD5)		
1	19	B	900948 -13	DIODE, IN5233B ZENER 6.0V ±5%	R47		
	20						
1	21	B	901301 -01	CHOKE, RF SHIELDED, 100μH	L1		
2	22	B	901301 -02	CHOKE, RF SHIELDED, 150μH	L2, L5		
2	23	B	901301 -03	CHOKE, RF SHIELDED, 680μH	L3, L4		
	24						
2	25	B	902422 -01	RESISTOR, SIP 330 Ω	RP1,2		
1	26	B	902422 -02	RESISTOR, SIP 680 Ω	RP3		
	27						
1	28	B	901751 -09	RESISTOR, 1/4 W, ±1%, 75 Ω	R17		
1	29	↑	↑ -10	↑ ↑ 274 Ω	R15		
1	30		-11	604 Ω	R24		
2	31		-12	845 Ω	R30,37		
1	32		-13	909 Ω	R16		
2	33	↓	↓ -14	↓ ↓ 2.26 K	R18, 25		
6	34	B	901751 -15	RESISTOR, 1/4 W, ± 1% , 9.09 K	R33,41-45		
	35						
	36						

commodore

TITLE: PCB ASSY, FLOPPY ANALOG

DRWN BY: K. ESSARO DATE 3-31-8 ENGR: A. I. WATA DATE 4-2-8 CHKD: APPR:

SIZE B 320817 REV R SHT 3/4

QUANTITY REQD PER PART / DASH NO. 01	ITEM	DS	PART NUMBER	DESCRIPTION	REF DES	BEND	NOTES
1	37	B	901550-94	RESISTOR, 1/4 W, ±5%, 68Ω	R39		
1	38	↑	-45	75Ω	R36		
1	39		-49	100Ω	R22		
1	40		-70	300Ω	R21		
1	41		-38	510Ω	R26		
8	42		-31	680Ω	R5,6,7,8,9,10,11,12		
5	43		-01	1KΩ	R1-4,27		
2	44		-53	2KΩ	R14,23		
2	45		-33	3KΩ	R32,40		
2	46		-66	5.6KΩ			(@ UD3 & UD5)
6	47	↓	-92	20KΩ	R13,19,20,28,31,38		
1	48	B	901550 -86	RESISTOR, 1/4 W, ±5%, 75KΩ	R46		
	49						
1	50	B	900105 -01	CAP., TANTALUM, N.P., 1.6μf, 15V	C13		SEE ITEM 51 FOR SUBSTITUTE
S	51	↑	900105 -02	CAP., TANTALUM, N.P., 1.5μf, 25V	C13		SUBSTITUTE FOR ITEM 50
1	52		900108 -31	CAP., ELECT, LOW LEAK, 10μf, 25V	C9		
2	53		900101 -07	CAP., ELECT., AXIAL, 4.7μf, 25V	C1,2		
5	54		900020 -01	CAP., CERM., .1μf, 50V	C3,4,10,11,14		
1	55		900020 -03	CAP., CERM., .033μf, 50V	C8		
1	56		900020 -04	CAP., CERM., .0047μf, 200V	C12		
2	57		900010 -38	CAP., CERM., .01μf, 50V	C17,18		
1	58		900050 -01	CAP., CERM., NPO, 680 Pf, 300V	C16		
2	59	↓	900050 -15	CAP., CERM., NPO, 750 Pf, 300V	C6,7		
2	60	B	900050 -16	CAP., CERM., NPO, 300 Pf, 500V	C5,15		
	61						
1	62	B	903316 -05	HEADER ASSY, 5 PIN, .156 CENT.	P6		
2	63	↑	903333 -05	HEADER ASSY, ST. POLAR., .125 C.	P9,10		PIN 2 REMOVED
1	64		903344 -10	HEADER ASSY, DUAL ROW, 20PIN	P7		
6	65		902652 -01	TRANSISTOR, 2N4401	Q3,4,7,8,9,10		
2	66	↓	902658 -01	TRANSISTOR, 2N3904			(@ UD3 & UD5)
4	67	B	902704 -01	TRANSISTOR, 2N4403	Q1,2,5,6		
	68						
	69						
	70						
E	71	B	320086-01	BUS WIRE (@CR18, CR24, CR27)			SEE ITEM 72 FOR SUBSTITUTE
S	72	B	320086 02	BUS WIRE			SUBSTITUTE FOR 71
	73						

commodore	TITLE: PCB ASSY FLOPPY ANALOG	DRWN BY: L. CESSARO	DATE 3-31-8	ENGR: A. I. DATA	DATE	SIZE B	320817	REV R	4
		CHKD:		APPR:					

QUANTITY REQD PER PART / DASH NO. 01	ITEM	DS	PART NUMBER	DESCRIPTION	REF DES	BEND	NOTES
1	37	B	901550-94	RESISTOR, 1/4 W, ±5%, 68Ω	R39		
1	38		-45	75Ω	R36		
1	39		-49	100Ω	R22		
1	40		-70	300Ω	R21		
1	41		-38	510Ω	R26		
8	42		-31	680Ω	R5,6,7,8,9,10,11,12		
5	43		-01	1KΩ	R1-4,27		
2	44		-53	2KΩ	R14,23		
2	45		-33	3KΩ	R32,40		
2	46		-66	5.6KΩ			(@ UD3 & UD5)
6	47		-92	20KΩ	R13,19,20,28,31,38		
1	48	B	901550 -86	RESISTOR, 1/4 W, ±5%, 7.5KΩ	R46		
	49						
1	50	B	900105 -01	CAP., TANTALUM, N.P., 1.6µf, 15V	C13		SEE ITEM 51 FOR SUBSTITUTE
5	51		900105 -02	CAP., TANTALUM, N.P., 1.5µf, 25V	C13		SUBSTITUTE FOR ITEM 50
1	52		900108 -31	CAP., ELECT, LOW LEAK, 10µf, 25V	C9		
2	53		900101 -07	CAP., ELECT., AXIAL, 4.7µf, 25V	C1,2		
5	54		900020 -01	CAP., CERM., .1µf, 50V	C3,4,10,11,14		
1	55		900020 -03	CAP., CERM., .033µf, 50V	C8		
1	56		900020 -04	CAP., CERM., .0047µf, 200V	C12		
2	57		900010 -38	CAP., CERM., .01µf, 50V	C17,18		
1	58		900050 -01	CAP., CERM., NPO, 680 Pf, 300V	C16		
2	59		900050 -15	CAP., CERM., NPO, 750 Pf, 300V	C6,7		
2	60	B	900050 -16	CAP., CERM., NPO, 300 Pf, 500V	C5,15		
	61						
1	62	B	903316 -05	HEADER ASSY, 5 PIN, .156 CENT.	P6		
2	63		903333 -05	HEADER ASSY, ST. POLAR, .125 C.	P9,10		PIN 2 REMOVED
1	64		903344 -10	HEADER ASSY, DUAL ROW, 20PIN	P7		
6	65		902652 -01	TRANSISTOR, 2N4401	Q3,4,7,8,9,10		
2	66		902658 -01	TRANSISTOR, 2N3904			(@ UD3 & UD5)
4	67	B	902704 -01	TRANSISTOR, 2N4403	Q1,2,5,6		
	68						
	69						
	70						
3	71	B	320086-01	BUS WIRE (@CR18, CR24, CR27)			SEE ITEM 72 FOR SUBSTITUTE
5	72	B	320086 02	BUS WIRE			SUBSTITUTE FOR 71
	73						

commodore	TITLE: PCB ASSY FLOPPY ANALOG	DRWN BY: L. CESSARO	DATE 3-31-8	ENGR: A. I. WATA	DATE 6-2-83	SIZE B	320817	REV R	SHT 4/4
		CHKD:		APPR:					

QUANTITY REQD PER PART / DASH NO.	ITEM	DS	PART NUMBER	DESCRIPTION	REF DES	BEND	NOTES
01							
REF	1	D	320806	LOGIC DIAGRAM, DIGITAL PCB - FLOPPY DISK			
	2						
N 1	3	D	320818	P.C. BOARD, DIGITAL			
	4						
1	5	B	901435-01	I C 6502 MPU	UN1		
1	6	↓	901455-01	6504 MPU	UH3.		
1	7		901437-01	6522 VIA	UM3.		
N 1	8		901466-02	6530 PIA	UK3.		
2	9	↓	901458-01	6532 PIA	UC1, UE1		
8	10	B	901453-03	RAM 4K STATIC	UC4 UD4 UE4 UC5 UD5 UE5	UF4 UE5	400 N SEC
	11						
3	12	B	901524-01	MC3446 INTFC BUS	UB1 UB2 UD2		
1	13	↓	901523-01	LM555 TIMER	UM2.		
N 1	14		901467-01	6316 (2316) ROM	UK6.		
2	15		901522-06	7406 HEX INV BUFFER	UN2 UJ6		
N 1	16		901522-19	7414 SCHMITT TRIGGER	UA4.		
N 1	17		901522-16	74190 COUNTER	UH5.		
N	18						
3	19		901521-01	74LS00 NAND GATE	UJ2, UH6,	UB4	
2	20		901521-21	74LS02 NOR GATE	UF6, UH2		
3	21		901521-02	74LS04 HEX INVERTER	UL2 UA1	E6	
1	22		901521-15	74LS133 NAND GATE	UM5.		
7	23		901521-11	74LS157 DATA SEL	UC3 UD3 UE3 UF3 UJ5 UK5	UL5	
N 3	24		901521-26	74LS193 COUNTER	UB6, UC6, UD6		
2	25		901521-17	74LS42 DECODER	UA3 UB3		
N 2	26		901521-28	74LS164 SHIFT REG	UN5 UP5		ITEM 25 MAY BE USED AS A SUBSTITUTE
N 2	27		901521-12	74LS165 SHIFT REG	UN6 UM6		
N 1	28		901525-01	74S04 HEX INV.	UA6		
N 1	29	↓	901468-06	6332-20 ROM	UL1		E000 — EFFF
N 1	30	B	901468-07	I C 6332-21 ROM	UH1		F000 — FFFF
	31						
N 2	32	B	901528-04	VOLTAGE REG 7812 +12V 1.5A	VR1, VR2		
1	33	B	901528-01	VOLTAGE REG LM323 +5V 3A	VR3		
	34						
5	35	B	901522-27	74164 SHIFT REG			MAY BE USED AS A SUBSTITUTE FOR ITEM 26
	36						
N 1	37	B	900556-02	CRYSTAL 16 MHZ	Y1		

MAY 23 1980
REFERENCE COPY

commodore	TITLE: P.C.B ASSY FLOPPY DIGITAL BOARD	DRAWN BY:	DATE 10/25/78	ENGR:	DATE	SIZE B	320820	REV V	4
		CHKD:		APPR:					

QUANTITY REQD PER PART / DASH NO. 01	ITEM	DS.	PART NUMBER	DESCRIPTION	REF. DES.	BEND	NOTES
3	38	B	900750-01	DIODE 1N4001 1A/50V	CR7~CR9		FOR SUBSTITUTE SEE ITEM 40
6	39	B	900753-01	DIODE 1N5402 3A/200V	CR1~CR6		
S	40	B	900750-05	DIODE 1N4005	CR7-9		SUBSTITUTE FOR ITEM 38
5	41	B	901550-58	RESISTOR, 1/4W 5% 470 Ω	R1, R2, R12-R14		
	42						
4	43		-53	2 KΩ	R7, 15, 16		
2	44		-85	2.4 KΩ	R5, R6,		
2	46		-03	5.1 KΩ	R3, R4		
1	47		-20	10 KΩ	R8,		
1	48	B	901550-07	RESISTOR, 1/4W 5% 100 KΩ	R9,		
1	49						
6	50	B	906403-19	RIVET-DOME HEAD OPEN END			FOR VR1 ~ VR3 HEAT SINK
	51						
	52						
2	53	B	900100-01	CAPACITOR, ELECTROLYTIC 10μF 25V	C30, C32,		
1	54	B	900100-33	CAPACITOR, ELECTROLYTIC 47μF, 16V	C34,		
	55						
2	56	B	900108-31	CAPACITOR, ELECTROLYTIC LOW LEAKAGE 10μF 25V	C19, C22,		
36	57	B	900020-01	CAPACITOR, DIPPED CERAMIC .1μF 50V	C1~C5, C21, C23~C29, C31-C46		
1	58	B	900010-17	CAPACITOR, CERAMIC 100pF 50V	C7,		
1	59	B	900010-38	CAPACITOR, CERAMIC .01μF 50V	C20,		
	60						
	61						
1	62	C	320268-01	HEAT SINK	H1		
A/R	63	B	904404	HEAT SINK, COMPOUND THERM			AS REQUIRED
	64						
2	65	B	906403-03	RIVET-DOME HEAD OPEN END			FOR P1
1	66	B	903206-01	CONNECTOR RT ANGLE	P1		
1	67	B	903841-10	HEADER ASSY, POST ETCH, 10 PIN, DUAL ROW	P2		10 PIN
1	68	B	903316-05	HEADER ASSY (.156 SPACING)	P3		5 PIN SEE ITEM 75 FOR SUBSTITUTE
1	69	B	903316-03	HEADER ASSY (.156 SPACING)	P4		3 PIN 76
1	70	B	903316-06	HEADER ASSY (.156 SPACING)	P4		6 PIN 77
1	71	B	903326-02	HEADER ASSY (.100 SPACING)	P5		2 PIN SEE ITEM 78 FOR SUBSTITUTE
1	72	B	904153-05	IC SOCKET 28 PIN			
4	73	B	904153-04	IC SOCKET 24 PIN			
5	74	B	904153-06	IC SOCKET 40 PIN			

MAY 23 1980
REFERENCE COPY

commodore

TITLE: P.C.B ASSY FLOPPY DIGITAL BOARD

DRAWN BY: | DATE: 10-15-79 | ENGR: | DATE | SIZE B | 320820 | REV V | 5

CHKD: | APPR:

QUANTITY REQD PER PART / DASH NO. 01	ITEM	DS	PART NUMBER	DESCRIPTION	REF DES	BEND	NOTES
S	75	B	903338-05	HEADER ASSY (.156 SP)	P3		5 PIN SUBSTITUTE FOR ITEM 68
S	76	B	903338-03	HEADER ASSY (.156 SP)	P4		3 PIN ↓ ↓ ↓ 69
S	77	B	903338-06	HEADER ASSY (.156 SP)	P4		6 PIN ↓ ↓ ↓ 70
S	78	B	903332-02	HEADER ASSY (.100 SP)	P5		2 PIN SUBSTITUTE FOR ITEM 71
3	79	3	900402-13	CAPACITOR, TANTALUM 1µf, 35V	C29, C31, C33		
	80						
	81						
	82						
	83						
	84						
	85						
	86						
	87						
	88						
	89						
	90						
	91						
	92						
	93						
	94						
	95						

MAY 23 1980
REFERENCE
COPY

commodore	TITLE: PCB ASSY FLOPPY DIGITAL BOARD	DRAWN BY:	DATE	ENGR:	DATE	SIZE		REV	
		CHKD:	7/14/79	APPR:		B	320820	V	6